001/2014-rev.0

PZB
Hydraulic Energy

Available from: *SEPTEMBER 2014*

NEW

4240 / 4241 series
SMART-LIGHT

NEW LIGHT DUTY SIDE PTO FOR ISUZU - IVECO - NISSAN - ZF GEARBOXES

PZB presents the new LIGHT DUTY side PTO **4240 / 4241 - SMART-LIGHT** series for ISUZU - IVECO - NISSAN - ZF gearboxes.



For more details, contact our sales department
or check our WebPTO software
(go to “Main Archives” menu, “PTO” section, and enter the power take-off p/n).

D01P-0-02 - New PZB - rev. 2

Interpump Hydraulics Spa a socio unico - **Business Unit PZB**
Sede Legale ed Operativa: Via A. Mingozzi, 6 - 40012 Calderara di Reno (BO) - Italy
Tel.: +39 051 6460511 - Fax ITA: +39 051 6460565 - Fax EXPO: +39 051 6460560
E-mail ITA: venditeitalia@pzbitaly.com - E-mail EXPO: info@pzbitaly.com - Web: www.pzbitaly.com
Cap. Soc. Euro 2.631.600,00 i.v. - N. Mecc. BO 056383 - R.E.A. BO 444225 - C.F. 00883010241 - P.Iva IT02128140361
Soggetta ad attività di Direzione e Coordinamento da parte di Interpump Group Spa

PZB
Hydraulic Energy

Available from: *SEPTEMBER 2014*

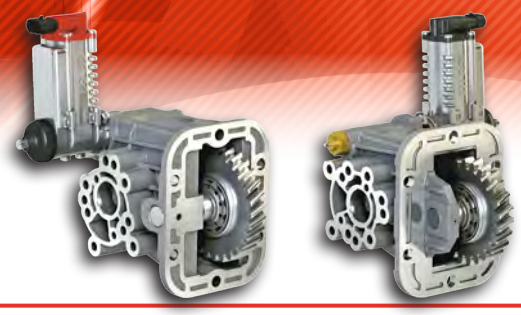

4240 - SMART-LIGHT series

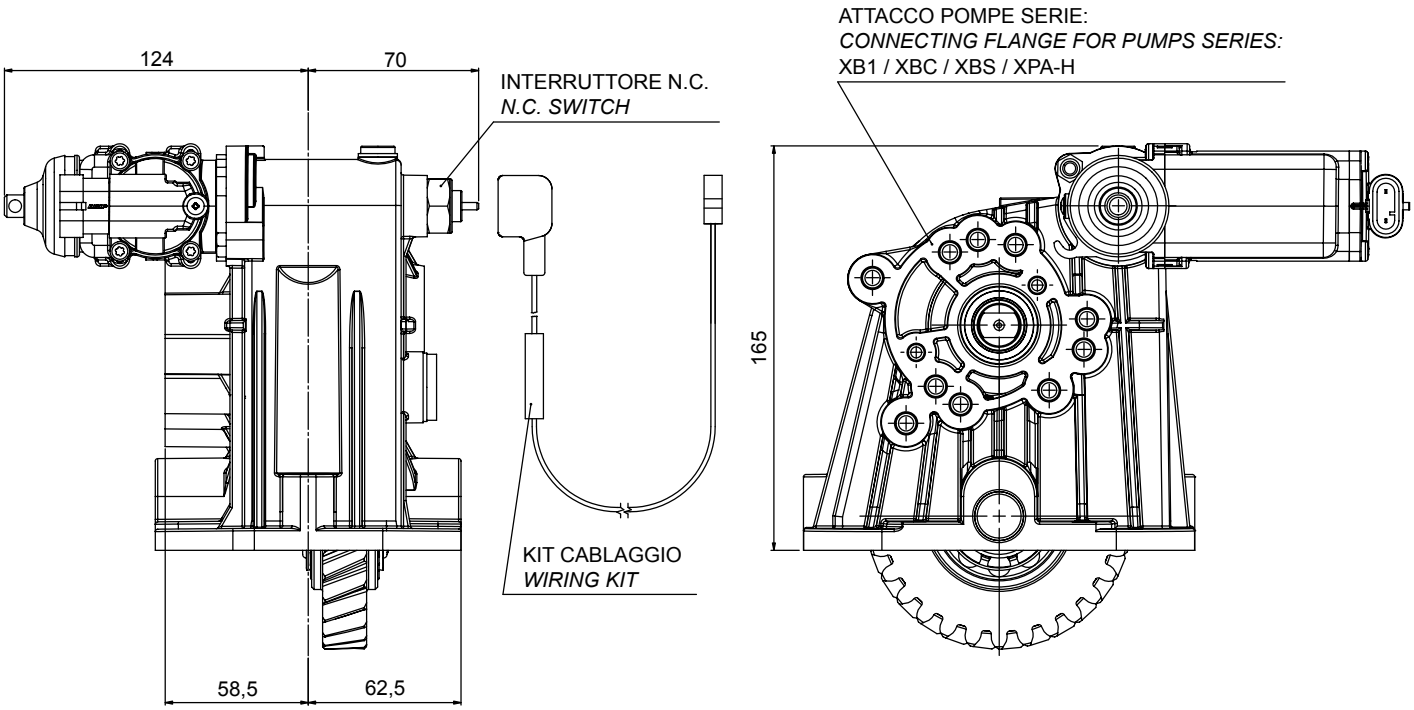

TECHNICAL SPECIFICATIONS PTO 4240 SERIES

PTO:	42401	42402	42403	42404	42405	42406
Transmission type:	NISSAN M5-35A	NISSAN M5-40A	IVECO 2840.6 ZF 6AS-380 VO ZF 6AS-400 VO ZF 6AS-380 VO (dx) ZF 6AS-380 VO (sx) ZF 6S-400 VO	IVECO 2840.6 FL11	IVECO 2825.5 IVECO 2830.5 ZF 5S-200 ZF 5S-270 (dx) ZF 5S-270 (sx) ZF 5S-300	IVECO 2832.6 IVECO 2833.6 ZF 6S-300 ZF 6AS-300 VD ZF 6S-350 VD
Torque (Nm):	90					
Output ratio:	1.305	1.567	1.530	1.453	1.300	1.180
Rotation:	opposite engine					
Shift type:	- electric ECO150 - mechanical for the new cable control series 399 - vacuum					
Additionally required:	- mounting kit code 205C8850000 - mounting kit code 205C8860000 *(for NISSAN M5-35A and M5-40A vehicles only, with "OLD" engine)* - Wiring kit code 205E8920000					
On request:	*for electrical connection kits, check our WebPTO software* *(go to "Main Archives" menu, "PTO" section, and enter the power take-off p/n).*					

INTERPUMP HYDRAULICS

Interpump Hydraulics Spa a socio unico - **Business Unit PZB**
Sede Legale ed Operativa: Via A. Mingozzi, 6 - 40012 Calderara di Reno (BO) - Italy
Tel.: +39 051 6460511 - Fax ITA: +39 051 6460565 - Fax EXPO: +39 051 6460560
E-mail ITA: venditeitalia@pzbitaly.com - E-mail EXPO: info@pzbitaly.com - Web: www.pzbitaly.com
Cap. Soc. Euro 2.631.600,00 i.v. - N. Mecc. BO 056383 - R.E.A. BO 444225 - C.F. 00883010241 - P.Iva IT02128140361
Soggetta ad attività di Direzione e Coordinamento da parte di Interpump Group Spa

INTERPUMP GROUP

PZB
Hydraulic Energy

Available from: *SEPTEMBER 2014*

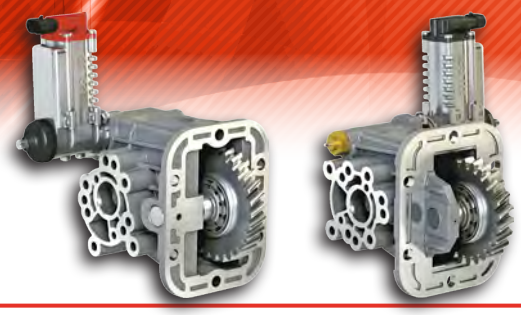

4241 - SMART-LIGHT series

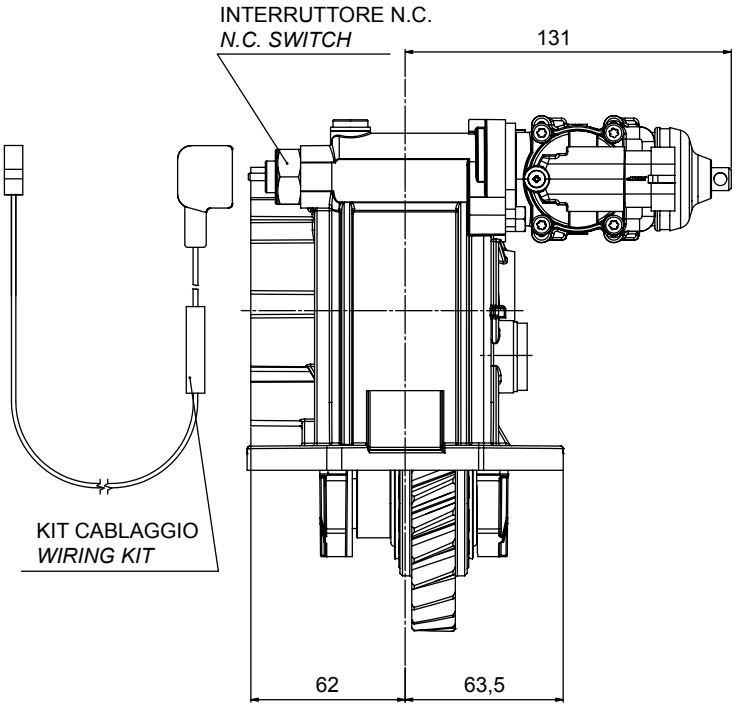

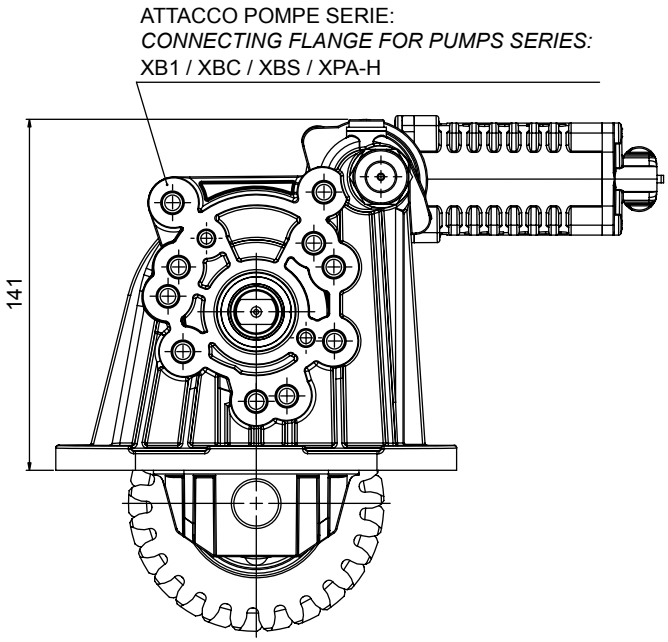

TECHNICAL SPECIFICATIONS PTO 4241 SERIES

PTO:	42411	42412	42415		42416	
Transmission type:	IVECO 2835.6	IVECO 2850.6	ISUZU MYY 5T	ISUZU MYY 6P ISUZU MYY 6S	ISUZU MYY 5A	ISUZU MYY 5S
Torque (Nm):	90					
Output ratio:	1.198	1.252	1.142	1.015	1.143	0.992
Rotation:	opposite engine					
Shift type:	- electric ECO150 - mechanical for the new cable control series 399 - vacuum					
Additionally required:	- mounting kit code 205C8900000 - shim code 205S8550000	- mounting kit code 205C8910000 - shim code 205S8070000	- mounting kit code 205C8840000			
	- Wiring kit code 205E8920000					
On request:	*for electrical connection kits, check our WebPTO software (go to "Main Archives" menu, "PTO" section, and enter the power take-off p/n).*					

INTERPUMP HYDRAULICS

Interpump Hydraulics Spa a socio unico - **Business Unit PZB**
Sede Legale ed Operativa: Via A. Mingozzi, 6 - 40012 Calderara di Reno (BO) - Italy
Tel.: +39 051 6460511 - Fax ITA: +39 051 6460565 - Fax EXPO: +39 051 6460560
E-mail ITA: venditeitalia@pzbitaly.com - E-mail EXPO: info@pzbitaly.com - Web: www.pzbitaly.com
Cap. Soc. Euro 2.631.600,00 i.v. - N. Mecc. BO 056383 - R.E.A. BO 444225 - C.F. 00883010241 - P.Iva IT02128140361
Soggetta ad attività di Direzione e Coordinamento da parte di Interpump Group Spa

INTERPUMP GROUP

PZB
Hydraulic Energy

Available from: SEPTEMBER 2014

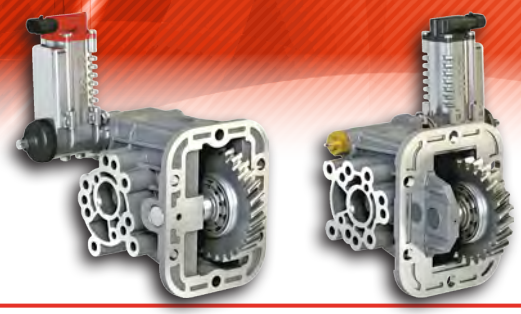

4240 / 4241 - SMART-LIGHT series

PTO ENGAGEMENT CONTROL

Electrical
ECO150



Mechanical for the new cable control series
399



Vacuum
205H6250000 *(for pto 4241 series)*
205H8870000 *(for pto 4240 series)*



PTO series
4240 / 4241

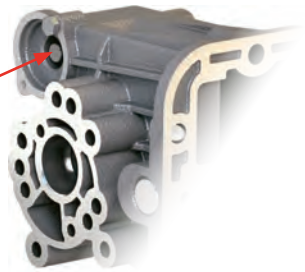

TECHNICAL SPECIFICATIONS XB1 AND XBC SERIES GEAR PUMPS

	XB1 		XBC 		
PUMP TYPE:	312BC1**007**S9	312BC1**008**S9	3158**011**1CF4	3158**016**1CF4	3158**022**1CF4
Displacement (cm³/rev):	7,5	8,5	11,5	16,4	20,5
Max continuous pressure (bar):	180	150	280	280	260
Mounting kit pump:	provided with the pump				

TECHNICAL SPECFICIATIONS XBS AND XPA-H SERIES GEAR PUMPS

	XBS 					XPA-H 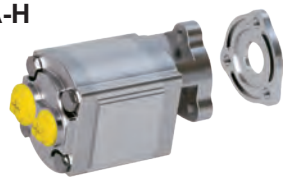			
PUMP TYPE:	3158**011**00	3158**016**00	3158**022**00	3158**028**00	3158**032**00	3125**010**	3125**015**	3125**025**	3125**036**
Displacement (cm³/rev):	11,5	16,4	20,5	28,6	32,6	10	15	25	35
Max continuous pressure (bar):	280	280	260	220	190	180	140	120	100
REQUIRED mounting kit pump:	205P8800000					205P8810000			

Interpump Hydraulics Spa a socio unico - **Business Unit PZB**
Sede Legale ed Operativa: Via A. Mingozzi, 6 - 40012 Calderara di Reno (BO) - Italy
Tel.: +39 051 6460511 - Fax ITA: +39 051 6460565 - Fax EXPO: +39 051 6460560
E-mail ITA: venditeitalia@pzbitaly.com - E-mail EXPO: info@pzbitaly.com - Web: www.pzbitaly.com
Cap. Soc. Euro 2.631.600,00 i.v. - N. Mecc. BO 056383 - R.E.A. BO 444225 - C.F. 00883010241 - P.Iva IT02128140361
Soggetta ad attività di Direzione e Coordinamento da parte di Interpump Group Spa